SHIFT LOCK SYSTEM

ON-VEHICLE INSPECTION

1. CHECK SHIFT LOCK OPERATION

(a) Shift the shift lever to P position.
(b) Turn the ignition switch to LOCK.
(c) Check that the shift lever cannot be shifted to any other positions other than P.
(d) Turn the ignition switch to ON, depress the brake pedal and check that the shift lever can be shifted to any other positions.
If operation cannot be done as specified, inspect the shift lock control ECU.

2. CHECK SHIFT LOCK RELEASE BUTTON OPERATION

(a) Using a screwdriver, remove the shift lock release button cover.
(b) When operating the shift lever with the shift lock release button pressed and the ignition key in ACC or ON, check that the lever can be shifted to any other position.
If operation cannot be done as specified, check the shift lever assembly installation condition.

3. CHECK KEY INTERLOCK OPERATION

(a) Turn the ignition switch to ON.
(b) Depress the brake pedal and shift the shift lever to any other positions other than P.
(c) Check that the ignition key cannot be turned to LOCK.
(d) Shift the shift lever to P position, turn the ignition key to LOCK and check that the ignition key can be removed.
If operation cannot be done as specified, inspect the shift lock control ECU.

4. INSPECT SHIFT LOCK CONTROL ECU

(a) Using a voltmeter, measure the voltage at each terminal.
HINT:
Do not disconnect the shift lock control ECU connector.

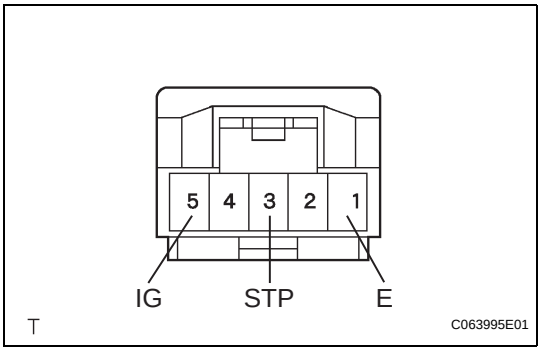

Terminal	Measuring Condition	Voltage (V)
5 (IG) - 1 (E)	Ignition switch ON	10 to 14
5 (IG) - 1 (E)	Ignition switch OFF	Below 1
3 (STP) - 1 (E)	Depress brake pedal	10 to 14
3 (STP) - 1 (E)	Release brake pedal	Below 1

If the result is not as specified, replace the shift lock control ECU.

cardiagn.com

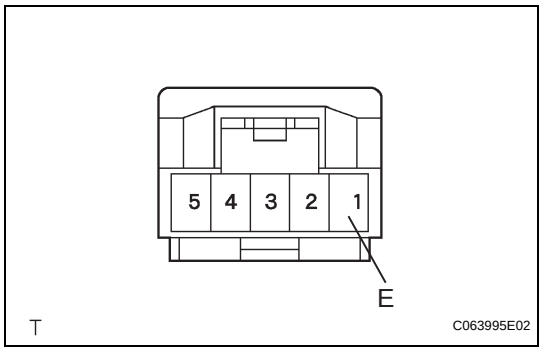

(b) Using an ohmmeter, measure the resistance at terminal E (1) and body ground.
HINT:
Do not disconnect the shift lock control ECU connector.

Terminal	Measuring Condition	Specified Value
1 (E) - Body ground	Always	Below 1 Ω

If the result is not as specified, replace the shift lock control ECU.

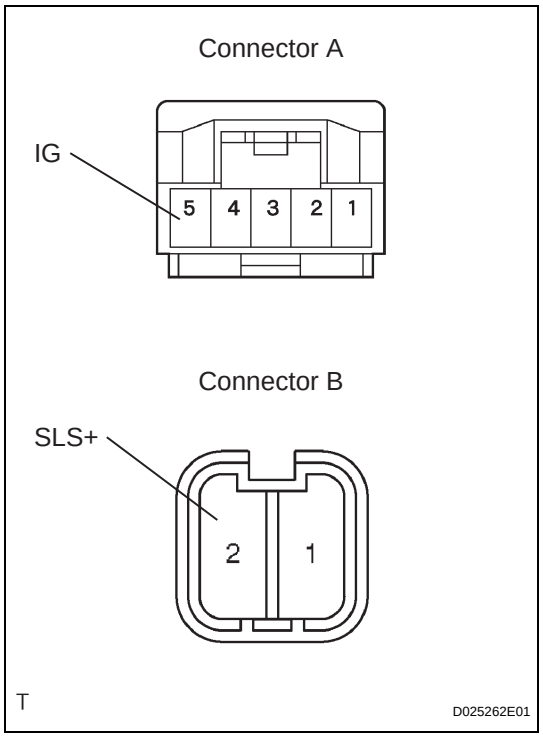

(c) Disconnect the connector of shift lock control ECU.
(d) Using an ohmmeter, measure the resistance between terminals.

Resistance

Terminal	Measuring Condition	Specified Value
A5 (IG) - B2 (SLS+)	**Switch ON**	**Below 1 Ω**
A5 (IG) - B2 (SLS+)	**Switch OFF**	**10 kΩ or higher**

If the result is not as specified, replace the shift lock control ECU.

cadiagn.com

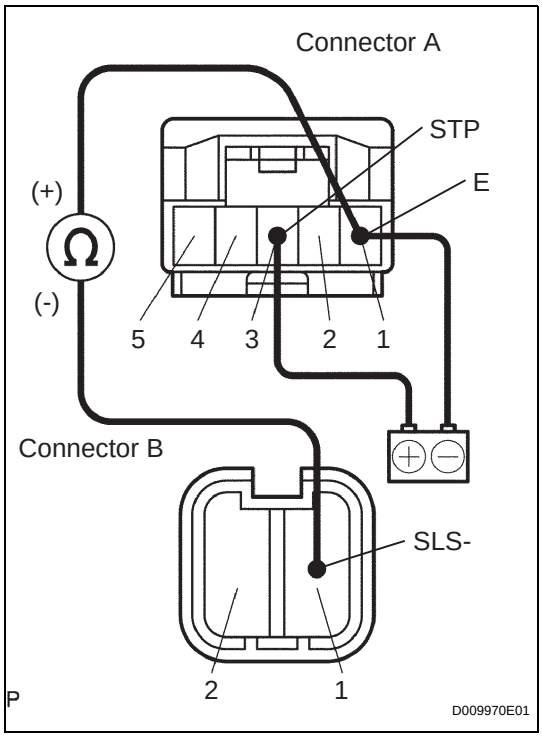

(e) Connect STP terminal to the batteries positive (+) terminal, and E terminal to the battery negative (-) terminal, and apply about 12 V between STP - E terminals.

(f) Using an ohmmeter, measure the resistance between terminals.

Resistance

Terminal	Measuring Condition	Specified Value
A1 (E) - B1 (SLS-)	Connect Battery	Below 1 Ω
A1 (E) - B1 (SLS-)	Disconnect Battery	10 kΩ or higher

If the result is not as specified, replace the shift lock control ECU.

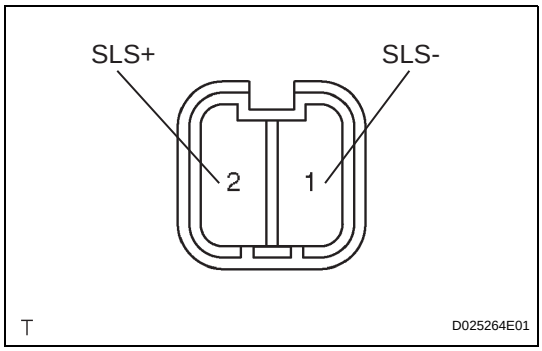

5. INSPECT SHIFT LOCK SOLENOID

(a) Disconnect the solenoid connector.

(b) Apply battery positive voltage between terminals 1 and 2. Check that operation noise can be heard from the solenoid.
If the solenoid does not operate, replace the solenoid.

AX

cardiagn.com